1064nm Polarization Maintaining Fiber Splitter

Product Description

The 1064nm fused fiber polarization beam combiner/splitter is used to couple two orthogonal polarized light beams into a single optical fiber or to split one input light into two orthogonal linear polarized output beams. These devices operate entirely through optical fibers; the polarization state is combined or separated through the fused fiber node. Compared to polarization beam combiners based on calcite prisms, this all-fiber construction achieves higher transmission rates and can withstand higher power. Since the polarization-maintaining fiber in the fused fiber

polarization beam combiner is not used as a polarizer, the input light must be linearly polarized and aligned with the fast axis and/or slow axis of the optical fiber. These devices are ideal for coupling light from two pump lasers into a single fiber to enhance the input light for erbium-doped or Raman fiber amplifiers.

Product features

Low insertion loss、 High extinction ratio、 High stability and reliability

Part Number

MP-PBC-06-2-L-2-1-A-S-C

Application area

Fiber optic sensing、 Ultrafast pulsed lasers、 Laser communication

Core parameters

Central wavelength	Max. Tensile Load
1064nm	5N

Dimension Drawing

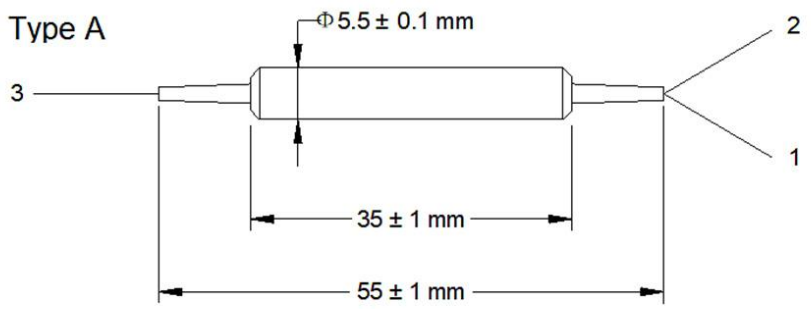

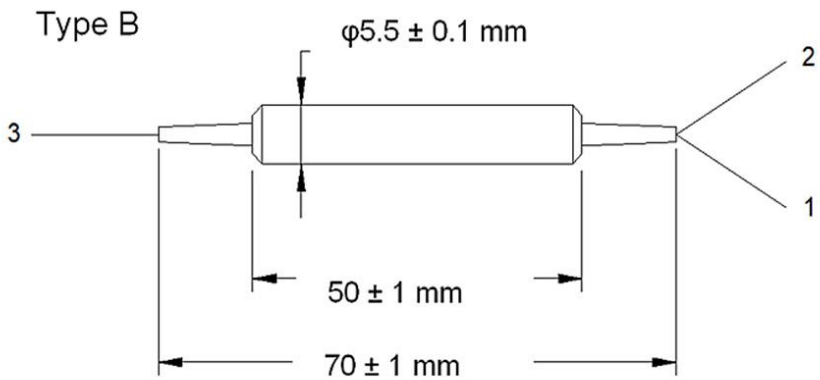

General Parameters

Parameters

Parameter	Unit	Value
Center Wavelength (λc)	nm	1064
Typ. Peak Isolation	dB	28
Min. Isolation, λc, 23 °C, all polarization states	dB	23
Typ. Insertion Loss, 23 °C	dB	0.6
Max. Insertion Loss, 23 °C	dB	0.8
Min. Crosstalk (Port 1 to Port 3)	dB	50
Min. Return Loss	dB	50

Parameter	Unit	Value
Max. Polarization Dependent Loss	dB	0.2
Max. Average Optical Power	W	10 or 20
Max. Peak Power for ns Pulse	kW	10
Max. Tensile Load	N	5
Fiber Type		Specified by ordering info
Operating Temperature	℃	10 to +50
Storage Temperature	℃	0 to +60

* - Polarization-maintaining (PM) fiber is typically aligned with the slow axis.

Ordering info

MP-PBC-①①-②-③-④-⑤/MP-PBS-①①-②-③-④-⑤

①①: Wavelength	532 - 532 nm,1064 - 1064 nm, 1310 - 1310 nm, 1550 - 1550nm, SS - Specify
②: Jacket Type	B - Bare fiber, 9- 900 μm loose tube, 3- 3 mm Cable, S - Specify
③:Fiber Length	1 - 1.0 m, S - Specify
④: Fiber Type	S - SM， P - PM
⑤: Connector Type	P- FC/PC, A- FC/APC, N - None, S-Specify