1064nm 15W Broad-Area Laser Diode

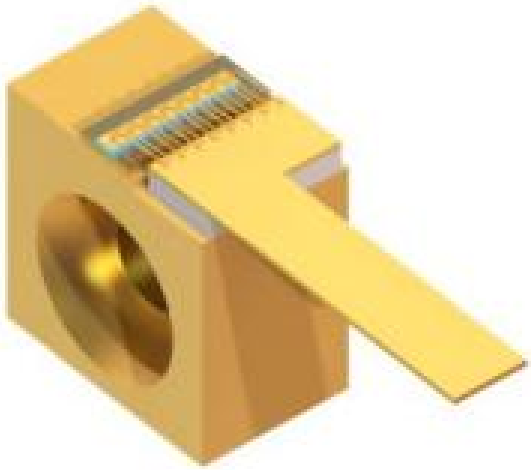

Product Description

Broad-area lasers, through optimized emission area design, deliver high-power, high-efficiency, low-thermal-load laser output, and are widely used in industrial, medical, scientific research, communications and other fields. Its advantages lie in excellent thermal management, low energy loss and superior beam quality, making it suitable for high-power requirements and precision applications.

Product features

Large spot output; Uniform light intensity distribution; High power optional; High beam quality; High reliability

Part Number

MP-BAL-1064-15W-CM

Application area

Industrial processing | Display manufacturing | Medical equipment | Scientific research experiments | Safety & sensing

Core parameters

Output Power	Center Wavelength	Bandwidth	Stripe Width
15W	1064 nm	4nm	250µm

Dimension Drawing

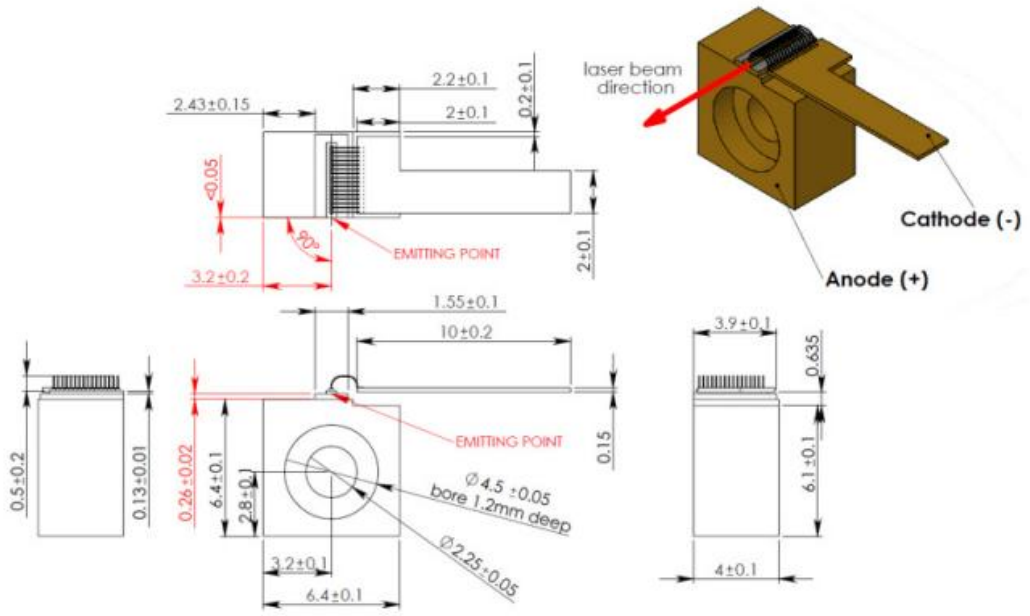

Red dimension refers to the intersection point

General Parameters

Recommended Operating Conditions (Unit mounted on copper heat sink)

Parameter	Min. Value	Typ. Value	Max. Value	Unit
Heat Sink Temperature	20	25	30	°C
Forward Current	-	18	19.5	A
Output Power	1.5	-	15	W

Characteristics(Tested for each sample under CW, 25°C, 18 A conditions)

Parameter	Min. Value	Typ. Value	Max. Value	Unit
Forward Current @ 9 W	-	-	19.5	A
Forward Voltage	-	1.5	1.9	V
Threshold Current	-	0.7	1.2	A
Average Wavelength	1049	1064	1079	nm
Bandwidth (FWHM)	-	4	10	nm
Wavelength Tunability vs.	-	0.4	-	nm/°C

Temperature				
Slow-Axis Beam Divergence (FWHM)	5	10	14	deg
Fast-Axis Beam Divergence (FWHM)	-	34	40	deg
Stripe Width	-	250	-	µm
Polarization	-	TE	-	-

Absolute Maximum Ratings

Parameter	Min. Value	Max. Value	Unit
Output Power	-	17	W
Forward Current (CW)	-	20	A
Reverse Voltage	-	2	V
Soldering Temperature (max. 5 seconds)	-	250	°C
Operating Temperature (above dew point)	5	60	°C
Storage Temperature (above dew point)	-40	85	°C

Typical Performance

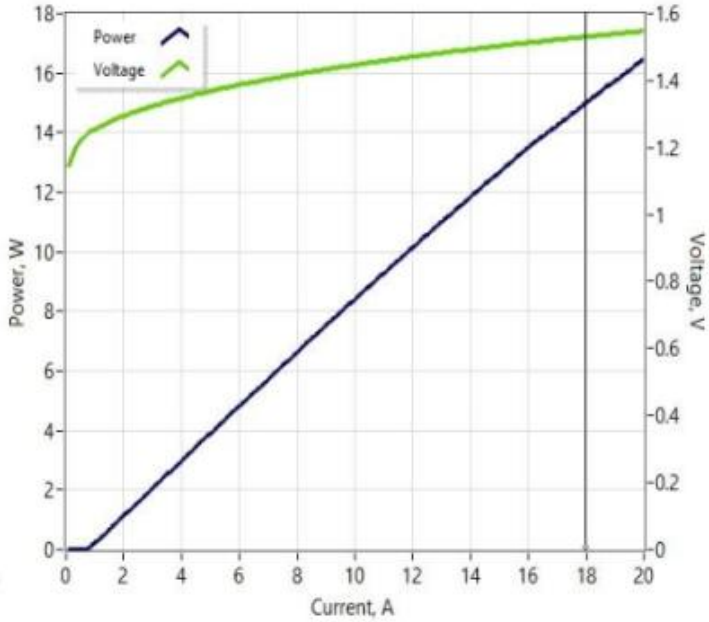

L-I-V characteristic graph

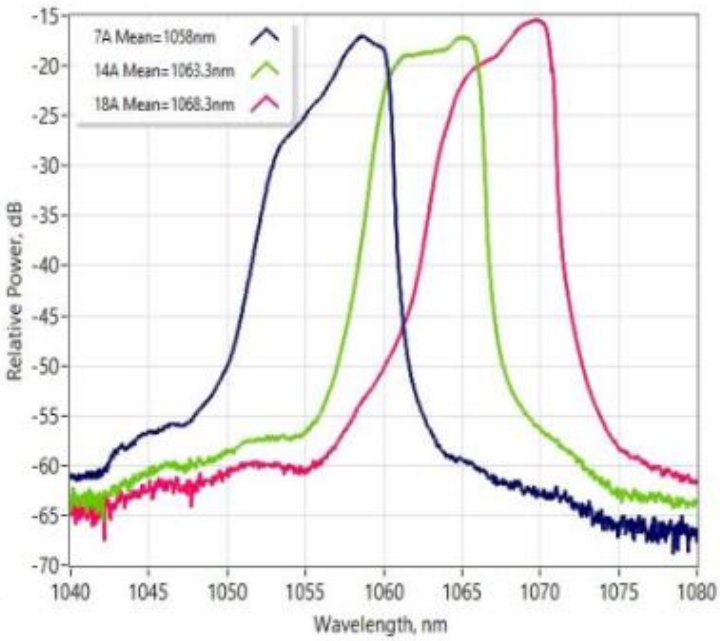

Optical Spectrum(Resolution 1nm)

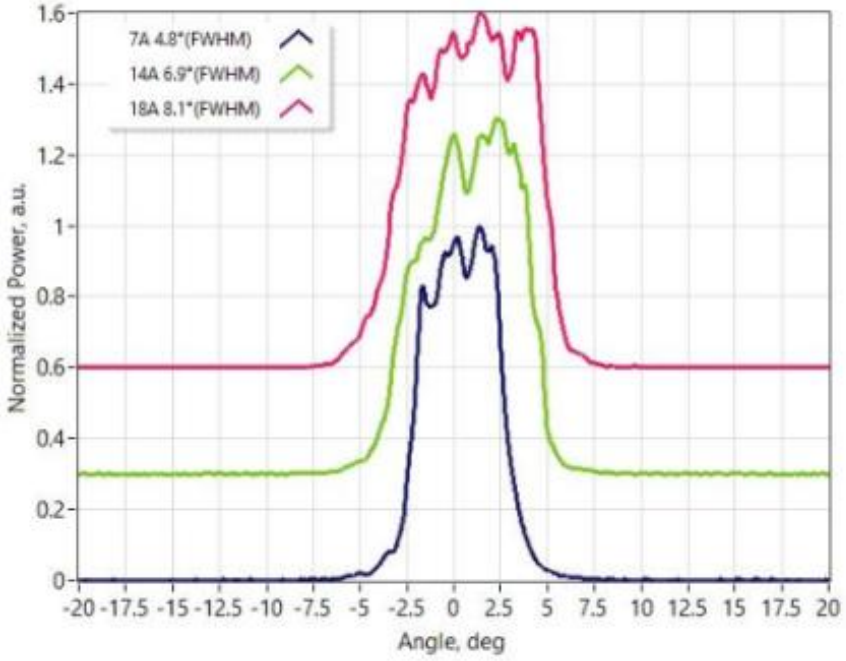

Slow-axis far-field

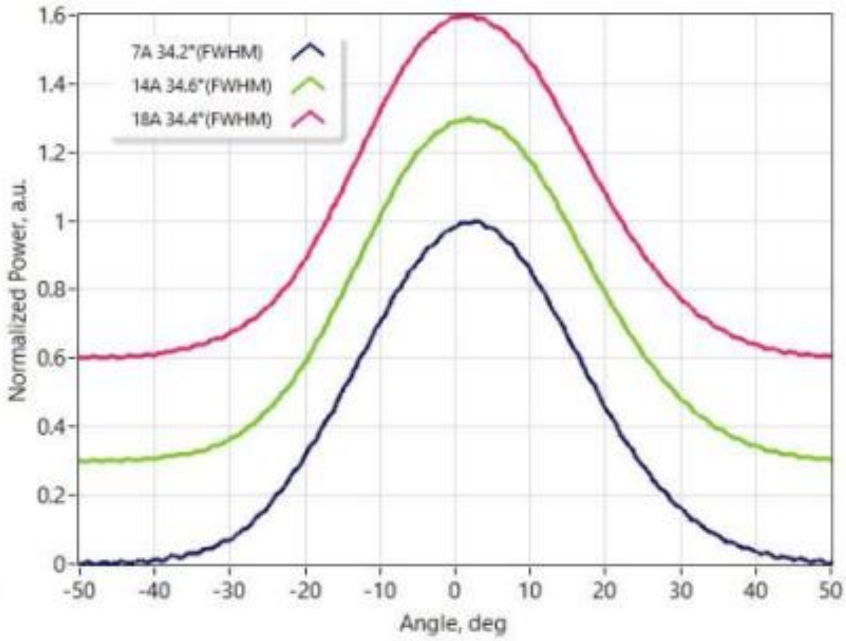

Far-axis far-field

Safety and Operating Instructions

The laser emitted by this device is invisible and harmful to the human eye. When the device is operating, avoid direct viewing of the fiber output or collimated beams along its optical axis. Always wear appropriate laser safety goggles during operation.

Absolute Maximum Ratings are only for short - term application to the device. Long - term exposure to Maximum Ratings or exposure to one or more Maximum Ratings may cause device damage or affect device reliability.

Operation outside the product's Maximum Ratings may lead to device failure or safety hazards. Use the power supply matched with the device to ensure that the maximum peak optical power is not exceeded. Devices on the heat sink need appropriate heat dissipation; ensure the heat sink has sufficient heat dissipation and thermal conductivity. It is recommended to use indium foil (or similar materials) as the thermal interface between the C - type base and the heat sink surface.

This device is an open - heat - sink diode laser; it can only be operated in a cleanroom environment or a dust - proof housing. Must control the operating temperature and relative humidity to avoid condensation on the laser surface. Avoid any contamination or contact with the laser surface.

ESD protection - Electrostatic discharge is the main cause of accidental product failure. Take extreme preventive measures to prevent ESD. When handling

products, use wrist straps, grounded work surfaces and strict anti - static technologies.