940nm 20mW SM Narrow Linewidth Laser Diodes

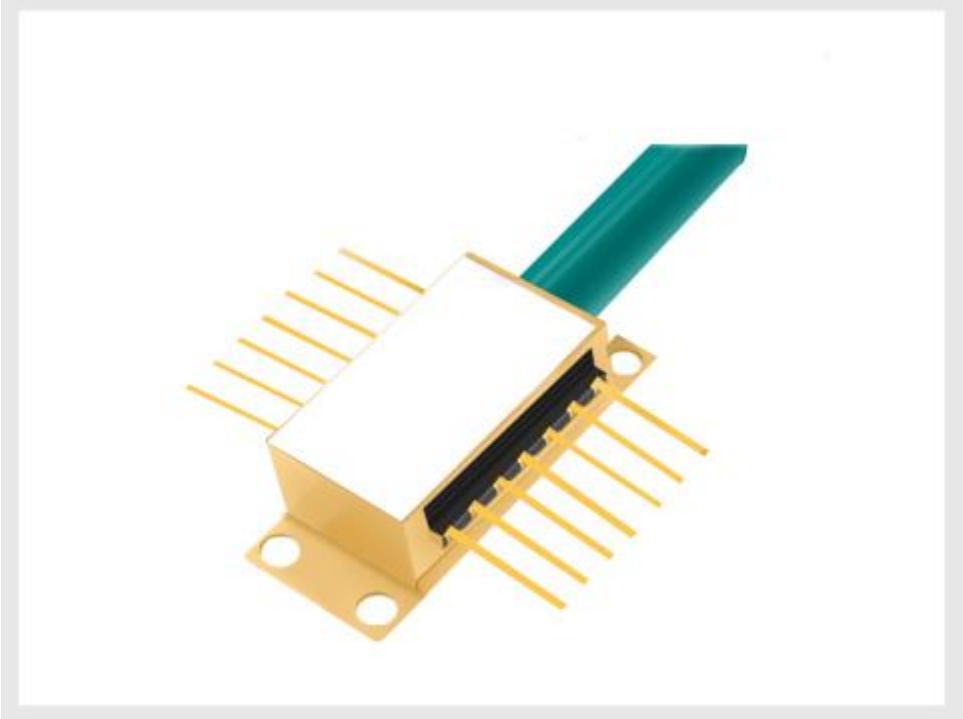

Product Description

Single frequency FBG-stabilized laser diode module designed for optical measurement and communication. The laser is packaged in Butterfly package with monitor photodiode and thermo-electric cooler (TEC). Module is pigtailed with 0.5-0.9 m of single mode or polarization maintaining (optional) fiber and connectorized by FC/APC connector.

Product features

Optical output: 80mW; Narrow linewidth (Δv < 1MHz); Wavelength: 940nm @ 25 °C ; SMor PMFiber (ø0.9mm) ; FC-APC connector ; 14-pin butterfly package; Internal monitor PD and TEC; Low power consumption

Part Number

MP-NL-940-A-A81-SA

Application area

Coherent Optical Communication | High-Precision Fiber Optic Sensing | LiDAR | Optical Metrology & Spectroscopy | Microwave Photonics

Core parameters

Wavelength	Output Power	Fiber Type
940nm	80mW	SM

General Parameters

Optical Characteristics

Parameter	Symbol	Condition	Min.	Typical	Max.	Unit
Center Wavelength	λc	TL=15～35°C CW	939	940	941	nm
Peak Optical Output Power	PO	-	-	50	85	mW
Spectral linewidth	LW	-	-	1	10	MHz
Side-mode Suppression Ratio	SMSR	CW	40	50	-	dB
Optical Isolation	-	-10 < TC < +70 °C	30	-	-	dB
Polarization Extinction Ratio	ER	-	20	-	-	dB
Relative Intensity Noise	RIN	CW, output power 10mW	-	-	-135	dB/HZ
Wavelength drift with case (-10 to 70 °C) temperature	△λ	TL=15～35°C	-	-	±30	pm

Electrical Characteristics

Parameter	Symbol	Condition	Min.	Typical	Max.	Unit
Threshold Current	ITH	-	-	25	40	mA
Operating current	Iop	CW	-	120	180	mA
TEC set temperature	Ts	-	15	-	35	℃
Laser Forward Voltage	VF	CW output power30 mW	-	1.3	2.5	V
Monitor Dark Current	ID	-	-	-	0.1	μA
Input Impedance	Zin	-	22	25	28	Ω
Thermistor Resistance	RTH	TL = 25 ℃	9.5	10	10.5	KΩ
Thermistor Current	ITC	-	10	-	100	μA
TEC Current	ITEC	TL = 25 ℃, TC = 70 ℃	-	-	1.4	A
TEC Voltage	VTEC	TL = 25 ℃, TC = 70 ℃	-		2.8	V

Absolute maximum ratings:

Item	Unit	Min	Typ	Max
Case Temperature	℃	-5	25	70
Chip Temperature	℃	+10	25	40
Operating Current	mA	0	120	180
Forward Voltage	V	0.8	1.8	2.5
TEC Current	A	-	1.2	1.4
Reverse Voltage(LD)	V	-	-	1.8

Pin definition

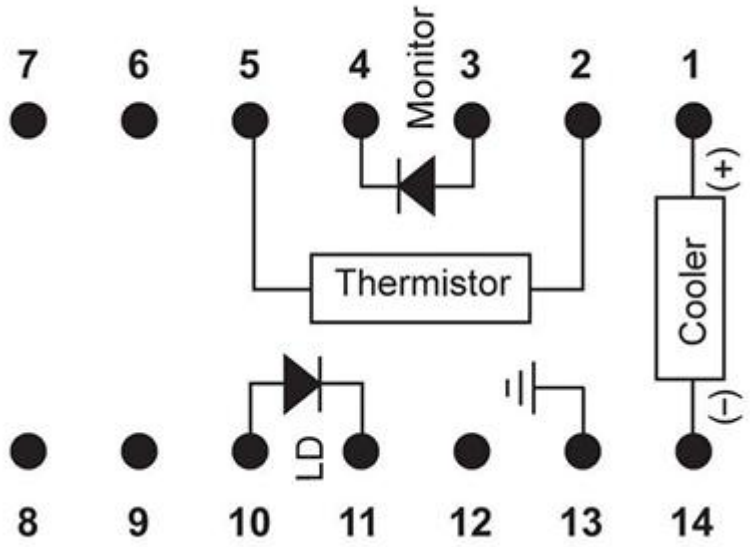

None PZT Bulit inside			
NO	Parameter	NO	Parameter
1	Cooler anode+	8	NC
2	Thermistor	9	NC
3	PD anode-	10	LD anode+
4	PD cathode+	11	LD cathode-
5	Thermistor	12	NC
6	NC	13	Case
7	NC	14	Cooler cathode-

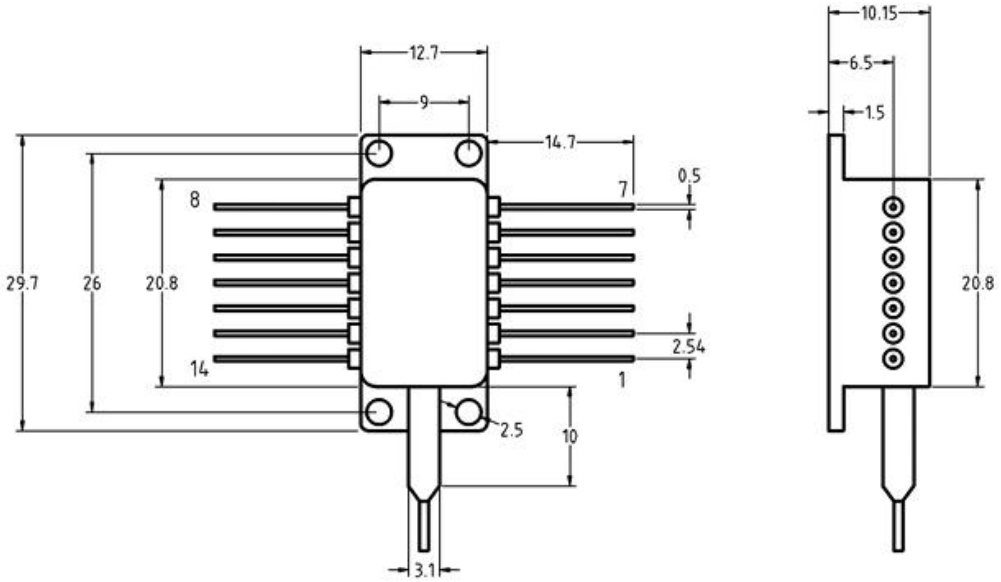

Spectrum

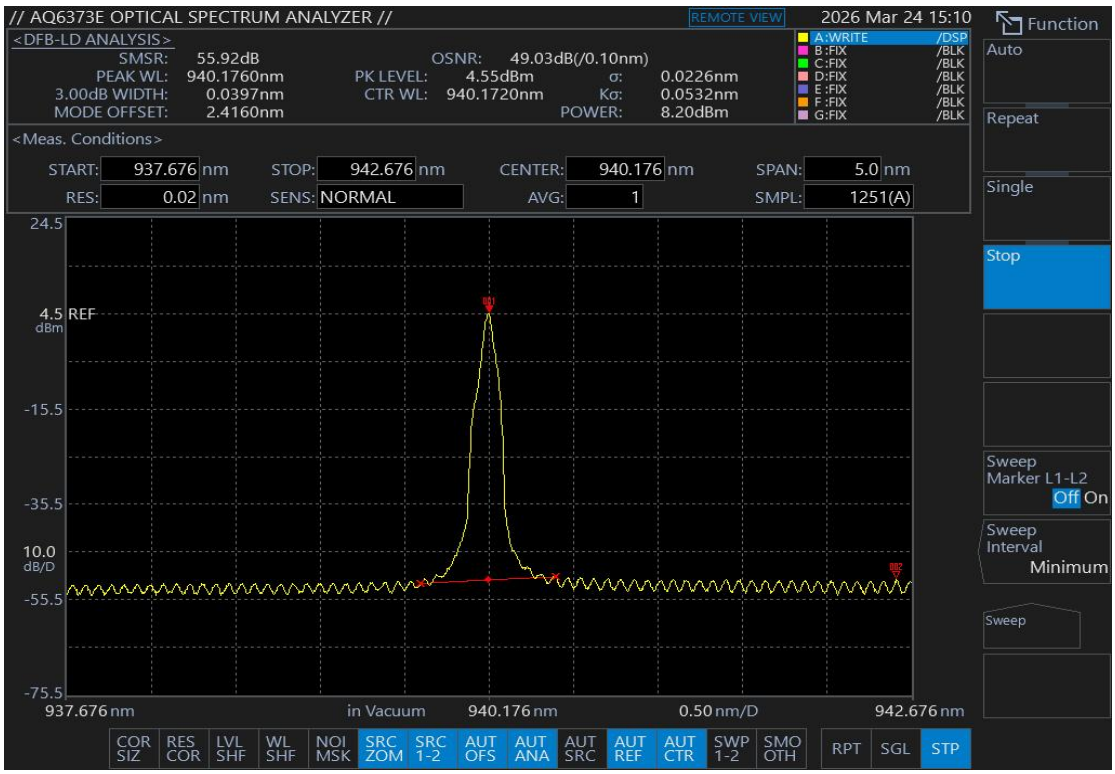

L-I-V Curve

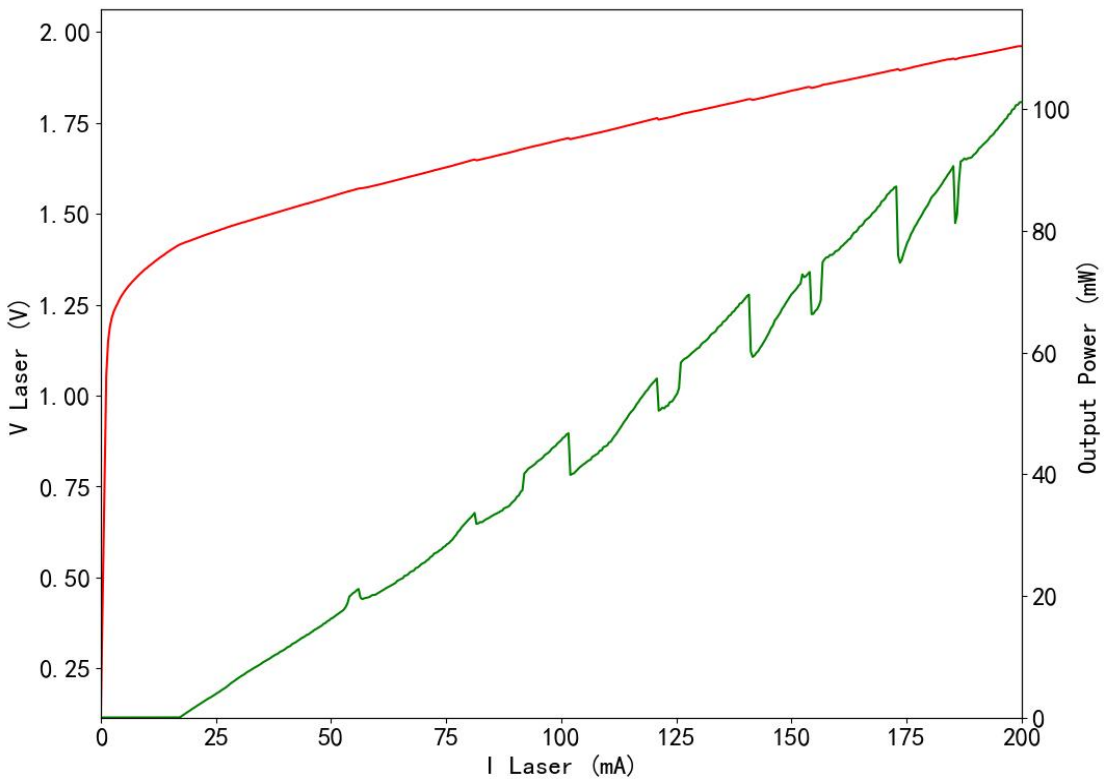

Wavelength Stability

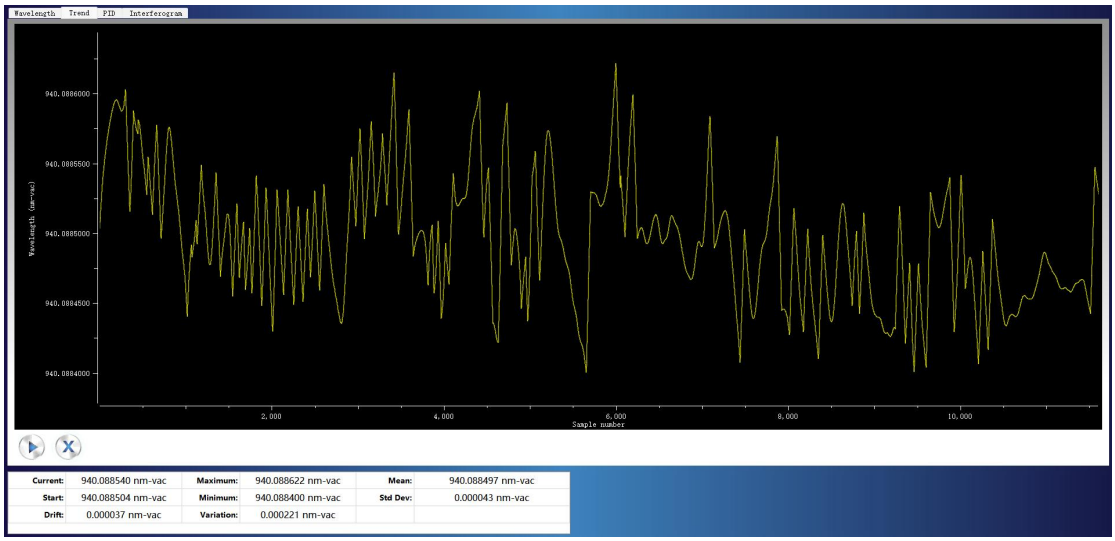

Fiber Pigtail Specifications

Parameters	Description
Fiber Type	SM fiber
Jacket Type	900μm loose tube
Pigtail Length	1.0±0.1m
Connector Type	FC/APC
PM fiber Connector Orientation	Please see the right figure

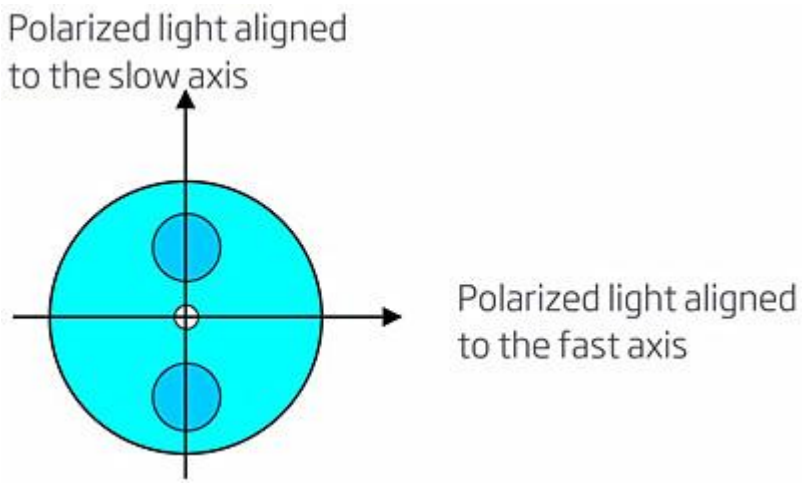

Note: The PM fiber and the connector key are aligned to the slow axis,fast axis is blocked